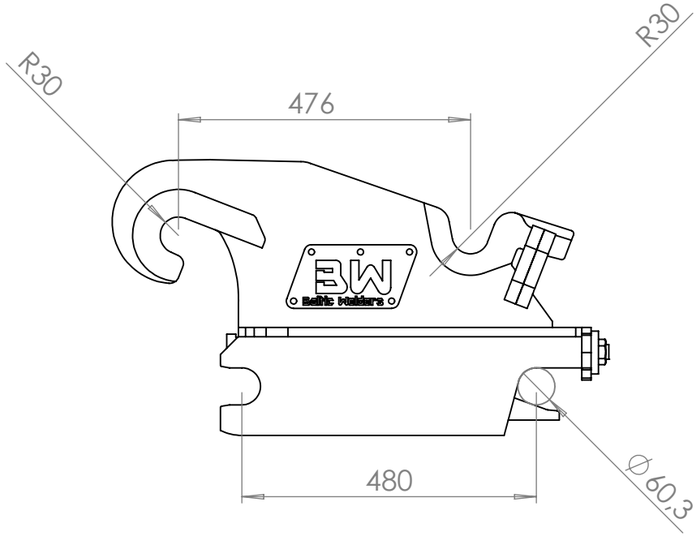

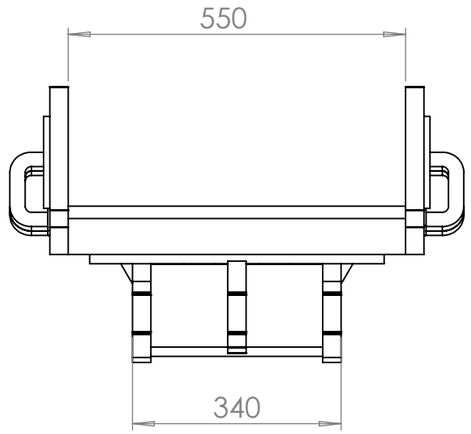

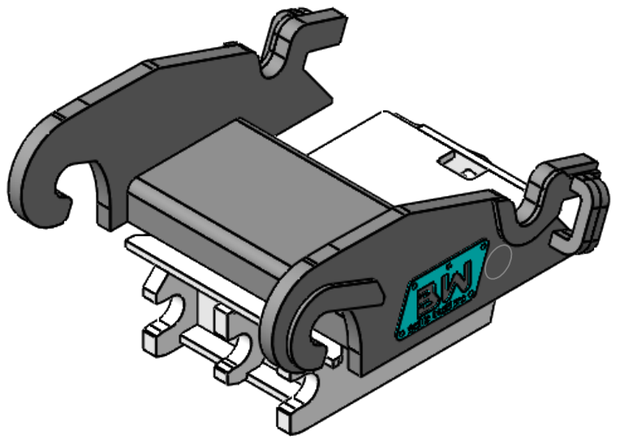

DWG NUMBER/TITLE:

ADA-CW40-S60-INFO

SHEET METAL THICKNESS: mm

Drawn: RPa Checked: RPa Date: 27 May 2025	WEIGHT: 194.51 kg	SCALE: 1:10	MATERIAL:	TOLERANCES: ISO 2768-m (SFS EN 22768) SFS-EN ISO 13920 (BG) SFS-EN ISO 5817-C	A3

Baltic Welders

FINISH TO CARBON STEEL IF NOT MENTIONED: 12944-1:M, 12944-2;C3, FeSa 2½

DESCRIPTION:

REVISION: -

SHEET 1 OF 1